User's manual

IF51

Description

IF51 is the small, low-cost yet high-performing converter for industrial applications suitable for use in installations where the information delivered by a sensor or encoder fitted with SSI interface needs to be converted into an analogue signal or into a serial RS-232/RS-485 data format.
The unit has been designed as a compact module with 12 screw terminals and a 9-position SUB-D connector (female). The housing is suitable for standard DIN rail mounting.

Table of contents

1 - Safety summary

1.1 Safety

- Always adhere to the professional safety and accident prevention regulations applicable to your country during device installation and operation;
- installation and maintenance operations have to be carried out by qualified personnel only, with power supply disconnected and stationary mechanical parts;
- device must be used only for the purpose appropriate to its design: use for purposes other than those for which it has been designed could result in serious personal and/or the environment damage;
- high current, voltage and moving mechanical parts can cause serious or fatal injury;
- warning ! Do not use in explosive or flammable areas;
- failure to comply with these precautions or with specific warnings elsewhere in this manual violates safety standards of design, manufacture, and intended use of the equipment;
- Lika Electronic s.r.l. assumes no liability for the customer's failure to comply with these requirements.

1.2 Electrical safety

- Turn OFF power supply before connecting the device;
- connect according to explanation in section "5 - Electrical connections";
- in compliance with 2004/108/EC norm on electromagnetic compatibility, following precautions must be taken:

- before handling and installing the equipment, discharge electrical charge from your body and tools which may come in touch with the device;
- power supply must be stabilized without noise; install EMC filters on device power supply if needed;
- always use shielded cables (twisted pair cables whenever possible);
- avoid cables runs longer than necessary;
- avoid running the signal cable near high voltage power cables;
- mount the device as far as possible from any capacitive or inductive noise source; shield the device from noise source if needed;
- minimize noise by connecting the unit to ground (GND). Make sure that ground (GND) is not affected by noise. The connection point to ground can be situated both on the device side and on user's side. The best solution to minimize the interference must be carried out by the user.

1.3 Mechanical safety

- Install the device following strictly the information in the section "4 - Mounting instructions";
- do not disassemble the unit;
- do not tool the unit;
- delicate electronic equipment: handle with care; do not subject the device and the shaft to knocks or shocks;
- respect the environmental characteristics of the device.

2 - Identification

Device can be identified through the **ordering code** and the **serial number** printed on the label applied to its body. Information is listed in the delivery document too. Please always quote the ordering code and the serial number when reaching Lika Electronic s.r.l. for purchasing spare parts or needing assistance. For any information on the technical characteristics of the product, refer to the technical catalogue.

3 - Introduction

IF51 is the small, low-cost yet high-performing converter for industrial applications suitable for use in applications where the information delivered by a sensor or encoder fitted with SSI interface needs to be converted into an analogue signal or into a serial RS-232/RS-485 data format.
The unit has been designed as a compact module with 12 screw terminals and a 9-position SUB-D connector (female). The housing is suitable for standard DIN rail mounting.

Applicable encoders and sensors
Single-turn or multi-turn absolute encoders and all similar sensors using a standard SSI interface (6 to 25 bits of resolution with binary or Gray code) can be connected to IF51. The unit can operate in either Master mode (clock signal is generated by IF51 unit) or in Slave mode (clock signal is generated by a remote device).

Remark about encoder resolution
The unit provides settings for the standard resolutions of 13 bits, 21 bits and 25 bits. As a general rule, for sensors with other resolutions you can use the next higher setting (i.e. set the unit to 21 bits when you use a 16-bit sensor). Depending on the brand and specification of the encoder, in some cases it may be necessary to blank out the surplus bits by using the bit blanking function described later, see "Hint for the use of the bit blanking function" on page 46. Anyway, generally the unit works properly even without special bit blanking.

4 - Mounting instructions

WARNING
Mount the unit with power supply disconnected.

IF51 converter must be installed and protected inside the electric panel. It provides DIN rail mounting and can quickly snap onto a DIN rail with built-in DIN rail clips that require no additional brackets or supports.

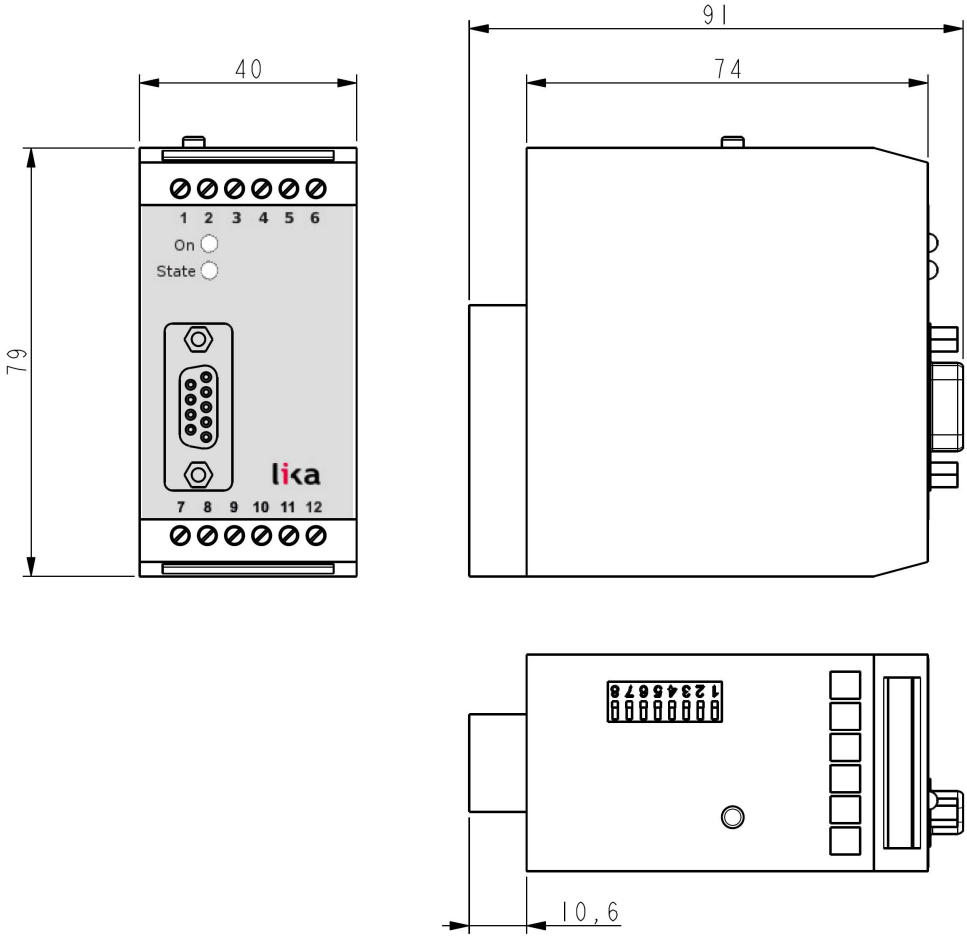

5 - Electrical connections

WARNING
Turn OFF the power supply before connecting the device.

The subsequent diagram shows the assignment of the screw terminals.
We recommend the Minus wire of the power supply to be connected to earth potential.
GND terminals 4, 6 and 12 are connected internally. Depending on the input voltage and the load of the auxiliary voltage output, the total power consumption of the unit is about 200 mA.

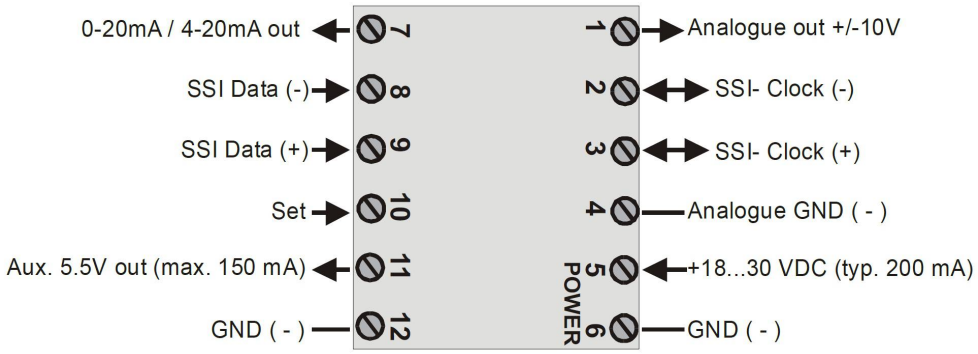

5.1 Encoder connections with Master operation

We recommend the shield to be connected to the Minus wire of the encoder supply voltage on both sides.

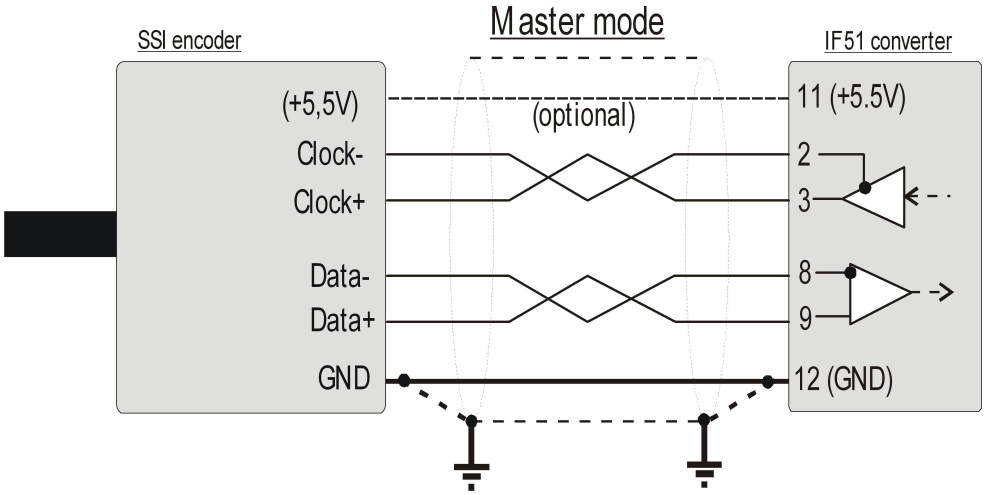

5.2 Encoder connections with Slave operation

In this mode IF51 converter operates in parallel to another unit, acting as a „listener" to the existing data communication.
Quite according to need, the common potential of the master can be connected to terminal 12 (GND) or remain open for fully differential operation.

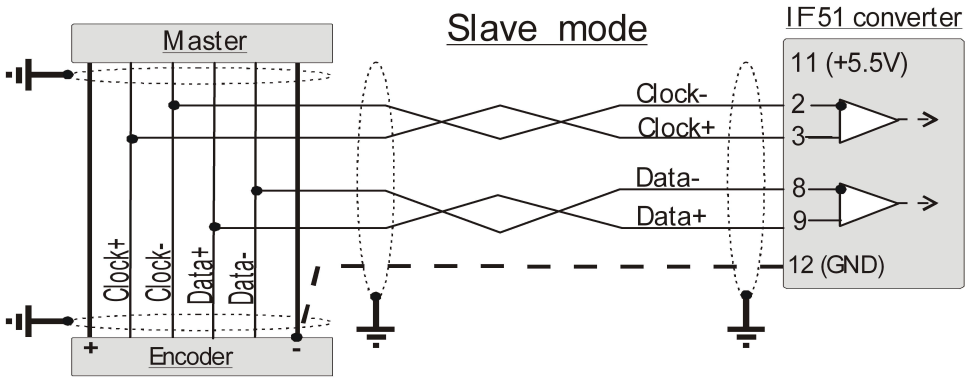

5.3 Analogue outputs

The unit provides one +/-10V voltage output and one 0-20 mA / 4-20 mA current output at a resolution of 14 bits (i.e. the voltage output operates in 1.25 mV steps).
The nominal load of the voltage output is 2 mA; the current output accepts loads between 0 and 270 Ohms.
A separate analogue ground terminal is internally connected to the GND potential of the power supply.

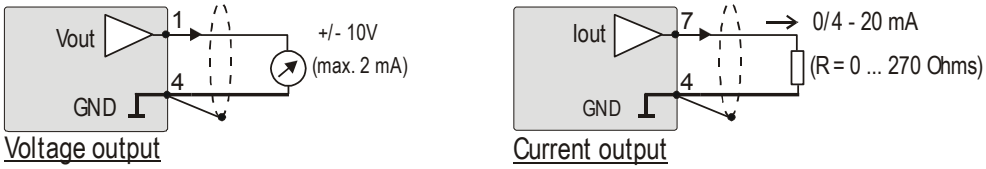

5.4 Serial interface

The unit provides both a RS-232 interface and a RS-485 interface, however only one can be used at a time. Serial communication allows to read out the encoder position and to set parameters and variables via PC, according to need.

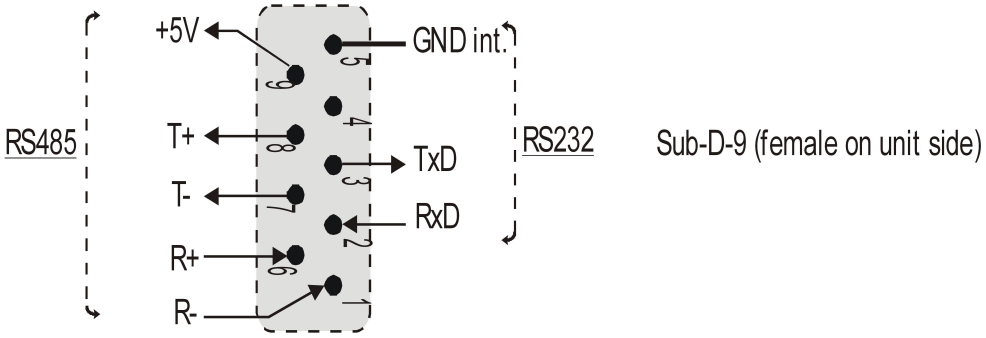

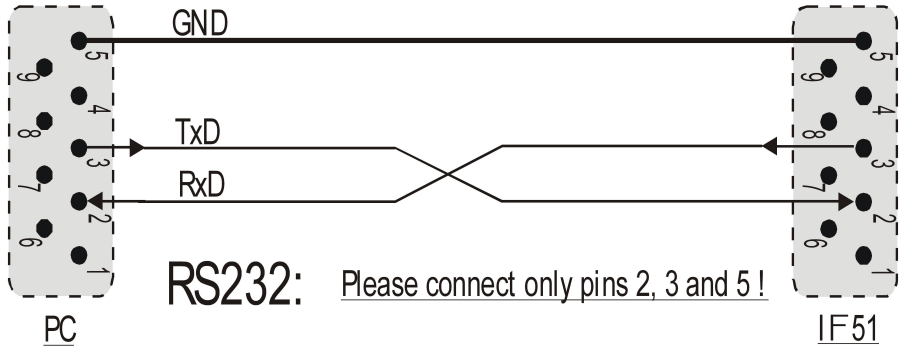
GND
TxD
RxD
RS232:
Please connect only pins 2, 3 and 5 !
PC
IF51

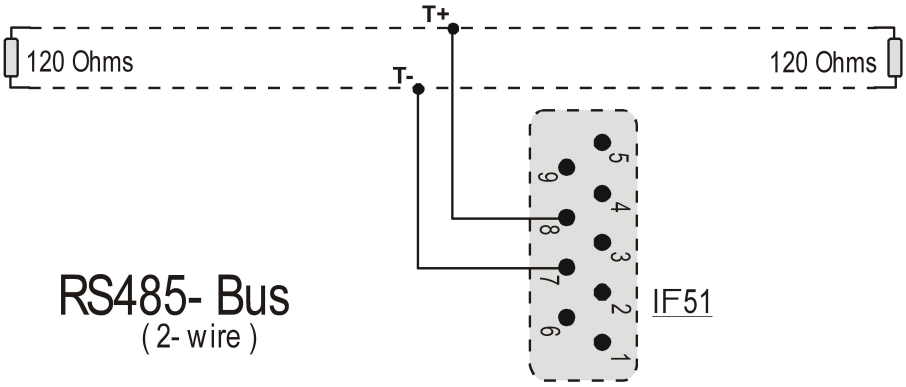
T+
T-
120 Ohms
120 Ohms
RS485- Bus
(2- wire)
IF51

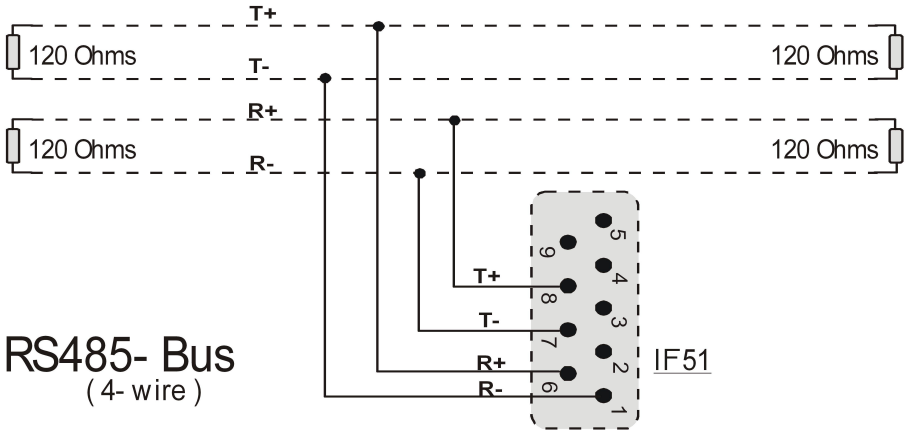
T+
T-
R+
R-
120 Ohms
120 Ohms
120 Ohms
120 Ohms
RS485- Bus
(4- wire)
IF51

6 - DIL switch settings

The DIL switch located on the top of the unit provides customer-specific settings of desired operating modes.

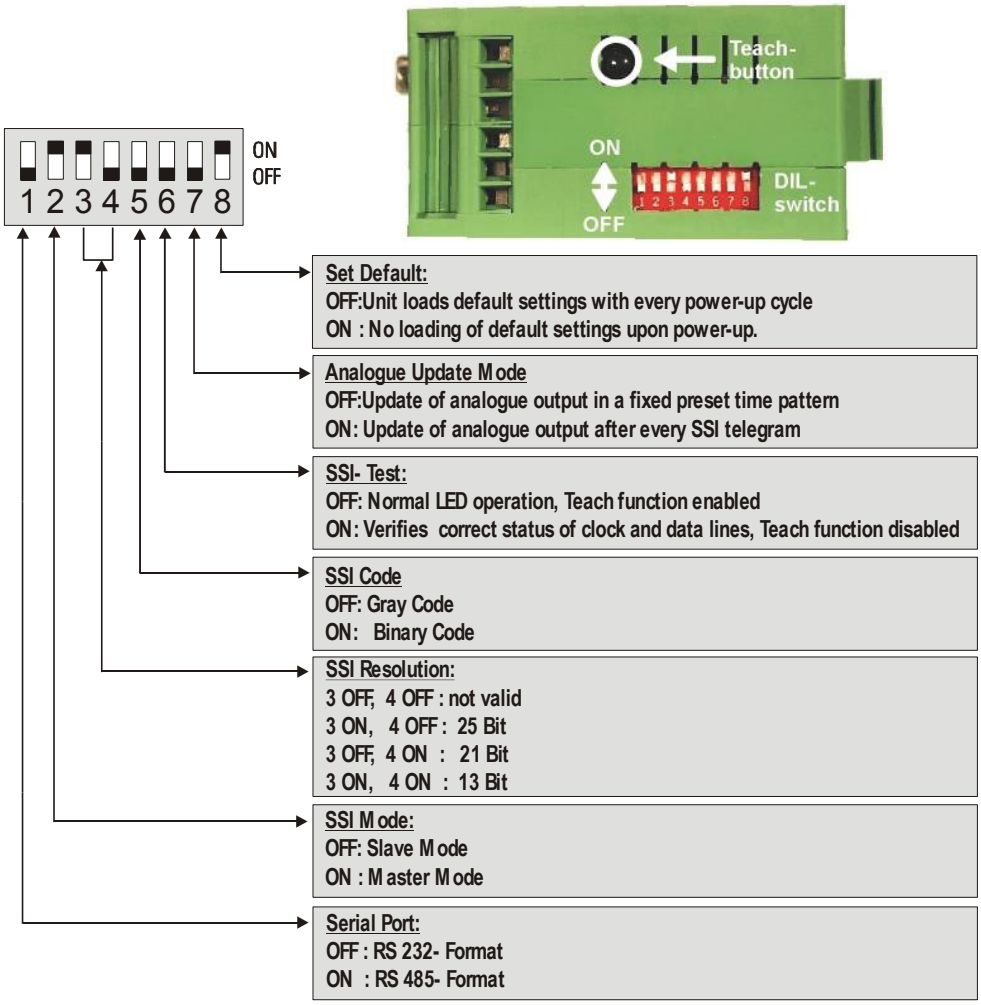

The switch settings shown above are suitable for Master operation of a 25-bit SSI encoder with Gray coded output. The analogue output operates with fixed updating time and the serial link is set to RS-232 communication.

NOTE
Changes in the switch settings will become effective only after the next power-up cycle!

WARNING
After set-up and commissioning, please set DIL switch 6 SSI-TEST to ON. If set to OFF, any even just unintentional touch of the TEACH button will cause your previous scaling input to be overwritten!

7 - Commissioning

In basic applications, you can use the TEACH procedure for commissioning of the unit. Extended functions need a PC for set-up and are described later.

7.1 Self Test

Set all DIL switches according to your application and connect both the encoder and the power supply to the unit. Set switch position 6 SSI-TEST to ON first (SSI Test mode) and turn the power on. Both the green LED (power) and the yellow LED (status) must light on. After a successful self-test, the yellow LED must switch off again (approx. 1 sec.).

7.2 SSI signal test

Press the TEACH button once now. This will check the SSI Data lines. The yellow LED must switch on. If it remains off, you need to cross the input lines "DATA+" (9) and "DATA-" (8).
Press the TEACH button one second time and the unit will test the SSI Clock lines in the same manner. Again, the yellow LED must be lit, otherwise you need to cross the lines "CLOCK+" (3) and "CLOCK-" (2)[3].
Press the TEACH button for the third time and the unit will switch the yellow LED off and close the test cycle.
If the yellow status LED is lit after the first and the second time you press the TEACH button, your encoder wiring is proper. Please switch the power off and set DIL position 6 SSI-TEST to OFF to enable TEACH operation. Using a PC and the OS3.2 operator software, you can check the status also in the OUTPUTS box next to the STATUS SSI-CLK and STATUS SSI-DATA items (red = status is ok).

7.3 Scaling of the analogue output with use of the TEACH function

Switch the power on again, with DIL position 6 SSI-TEST set to OFF. Press the TEACH button once.
The yellow status LED will start blinking at a slow frequency now while the unit waits for the zero position (initial position) to be set. So move the encoder and reach your preferred zero position output and then press the TEACH button again.
This will store your zero definition and the LED will start blinking at a higher frequency now while the unit waits for the full scale position (final position) to be set. Move the encoder and reach your preferred full scale position output and then press the TEACH button once more.
This will store your full scale definition and the LED will switch off. Your analogue output is now set to the desired operating range, according to the Output Mode setting.

3 Testing the clock lines is primarily useful with Slave operation. Though the test works also in Master mode, the result is only intended to show that the internal generation of the clock works properly. However, with Master mode, this test cannot indicate faulty clock drivers or bad wiring of the clock lines.

NOTE

- Your full scale position (final position) is allowed to be higher or lower than the zero position (initial position).
- Further scaling facilities and linearisation functions are available using the PC set-up.
- **Teach Minimum** always refers to the initial output value defined by **Output Mode**, i.e. 0 volts or 0 mA or 4 mA.
- When, after setting the full scale position (final position), the yellow status LED does not switch off, this indicates that an overflow error has occurred, i.e. the mechanical zero position of your encoder is found between your two teach settings (see Figure below). In this case you need to change the zero position of the encoder (mechanically or by programming the encoder properly). With PC set-up, the converter itself is able to provide also an electronic suppression of the overflow jump.
- The only way to reset an overflow error state is to switch on the power supply.
- The LED overflow check may fail with encoders providing a resolution lower than 13 bits.

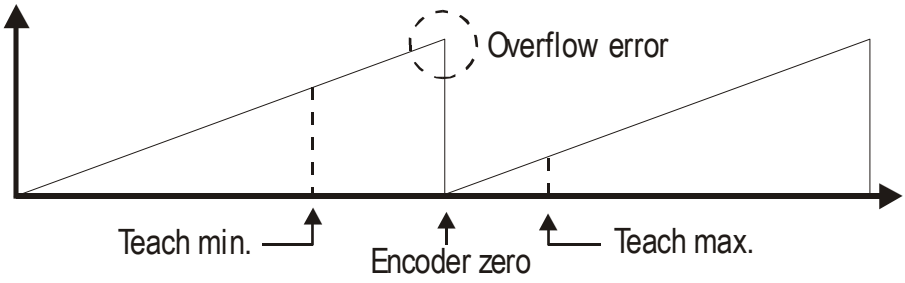

7.4 SET input

Providing a HIGH signal to the SET input (DIL switch terminal 10) causes the unit to temporary replace the SSI encoder data with the value entered next to the **SSI Set value** register; the analogue output as well as the serial readout will follow correspondingly. This means that independently of the actual mechanical position of the encoder the unit internally uses the register data set in **SSI Set value** instead of the encoder SSI data. It turns back to normal encoder reading as soon as the SET signal goes LOW again.
This function can be very useful for testing and commissioning purposes.
The SET input uses PNP / HTL characteristics (LOW = open or 0 – 3 V, HIGH = 10 – 30 V).

8 - Serial readout of the actual encoder position

You can read out the actual SSI position of the encoder at any time using a serial connection. A PC is required to set the communication parameters.

IF51 uses the DRIVECOM communication standard according to ISO 1745.
Details about this protocol can be found in the file Serial Protocol 1a.pdf which is available for download from Lika Electronic website.

The serial access code for the actual encoder position is „ :8 ".
(ASCII characters, colon and 8)

9 - PC set-up using OS3.2 operator software

Using a PC and our operator software OS3.2 the full set of functions for setting up the unit is available. You can download this software and full instructions, free of charge, from Lika Electronic website at the address www.lika.biz.

- Connect your PC to the converter using a serial RS-232 cable having the wire connection as shown in section "5.4 Serial interface" on page 34. Make sure the cable only connects pins 2, 3 and 5.
- Start the OS3.x software, then the following screen will appear:

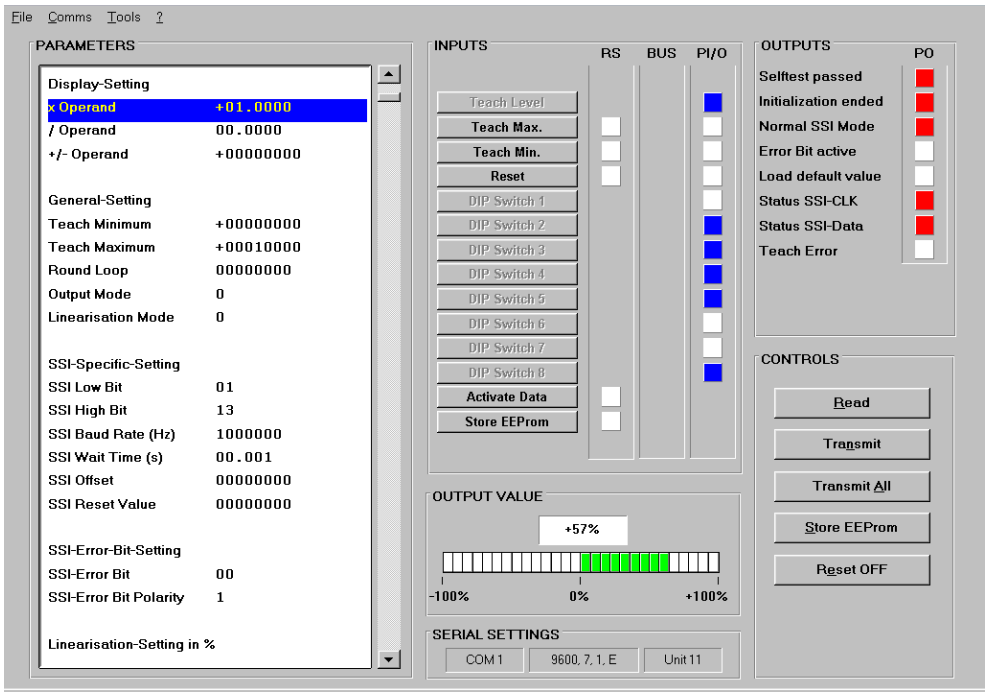

- In case your text and colour fields remain empty and the headline shows the message OFFLINE, then you must check your serial settings. To do this, press the COMMS command in the menu bar. Ex factory, the unit features the following serial standard settings:

Unit No. 11, Baud rate 9600, 1 start/ 7 data/ parity even/ 1 stop bit

- If the serial settings of the unit should be unknown, you can run the SCAN function from the TOOLS menu to find out them.

10 - Parameter settings

10.1 Display settings

X Operand

/ Operand

+/-Operand

These operands are used to convert the position information transmitted by the encoder into other engineering units like millimetres or inches etc. This conversion only refers to the numeric readout value by serial link, but does not affect the scaling of the analogue output.

With the settings **X Operand** = 1.0000
/ Operand = 1.0000 and
+/-Operand = 0.0000
the serial readout value equals to the encoder value.

$$\text{Serial Readout} = \left[\text{SSI encoder data} \times \frac{\text{xOperand}}{\text{/Operand}} \right] + \text{+/-Operand}$$

10.2 General settings

Teach Minimum

Teach Maximum

These two settings define the range of the encoder where the analogue output should move between minimum and maximum output. At any time you can use the TEACH button of the unit or the TEACH MIN. / TEACH MAX. keys in the INPUTS box of the operator software to set these registers[4], anyway you are free to enter your settings directly via keyboard, without using the TEACH function. The format of the analogue outputs must be set next to the **Output Mode** parameter (see on page 44). If **Output Mode** = 0 (-10V ... +10V) you must set a value that is half the maximum resolution of the encoder next to the **Teach Minimum** parameter (value has to be always positive); you must set the maximum resolution of the encoder next to the **Teach Maximum** parameter. In all other cases (**Output Mode** = 1, 2 or 3) set 0 next to the **Teach Minimum** parameter; the maximum resolution of the encoder next to the **Teach Maximum** parameter.

4 Press the TEACH MIN. key on and then off, then press the TEACH MAX. key on and then off. To activate your Teach results press the ACTIVATE DATA key; to read out and see your Teach results on the screen press the READ key. All settings will be finally stored to the unit after clicking the STORE EEPROM key.

EXAMPLE
Let's assume that the resolution of the connected encoder is 12 x 13 bits (4096 cpr x 8192 revolutions), that is 25 bits = 33554432 information. In this case we must set the following values:

Output Mode = 0 = -10V ... +10V
Teach Minimum = 16777216
Teach Maximum = 33554432

Output Mode = 1 = 0V ... +10V
Teach Minimum = 0
Teach Maximum = 33554432

Output Mode = 2 = 4mA ... 20mA
Teach Minimum = 0
Teach Maximum = 33554432

Output Mode = 3 = 0mA ... 20mA
Teach Minimum = 0
Teach Maximum = 33554432

Round Loop

As a general rule, this setting should be set to 00000. Any other settings will replace the real encoder position with a repeating cycle count.

EXAMPLE
When we set this register to 2048, the internal position register will only move in a range between 0 and 2047. When we exceed the lower limit zero with reverse direction, again 2047 will appear. When we exceed the upper limit 2047 with forward direction, we restart at 0 again.
The zero position of the round loop counter can be set in the register **SSI Offset** which allows settings ranging between 0 and the **Round Loop** value. Register **Direction** allows to set the counting direction of the round loop counter (0 = up, 1 = down).
Within this new definition of a round loop range, you are free to set the zero and full scale thresholds of your analogue output again by means of **Teach Minimum** and **Teach Maximum** parameters.

The following drawings explain the coherence among original encoder data, Round Loop setting, SSI Offset and Direction registers.

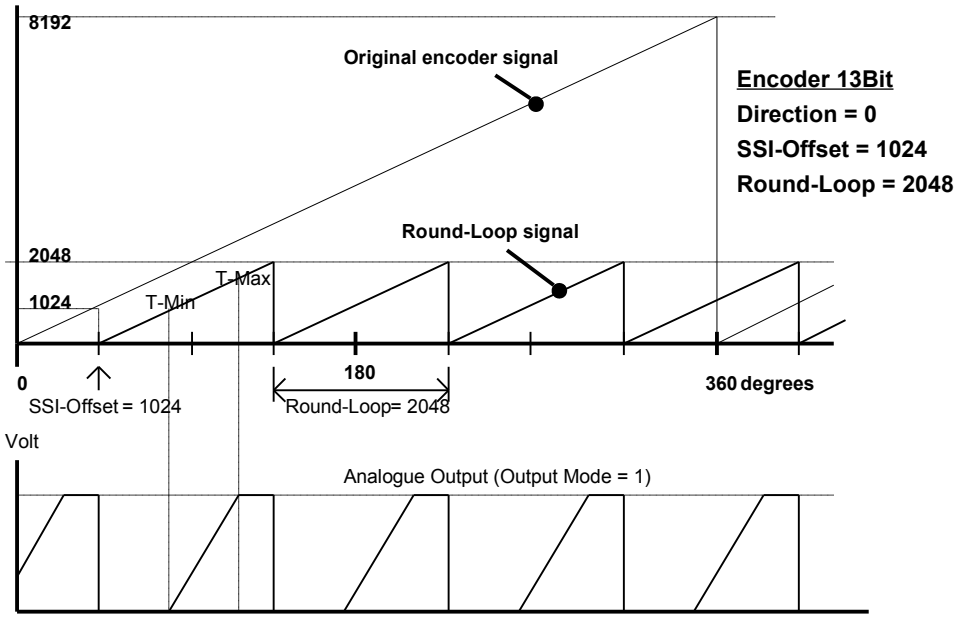

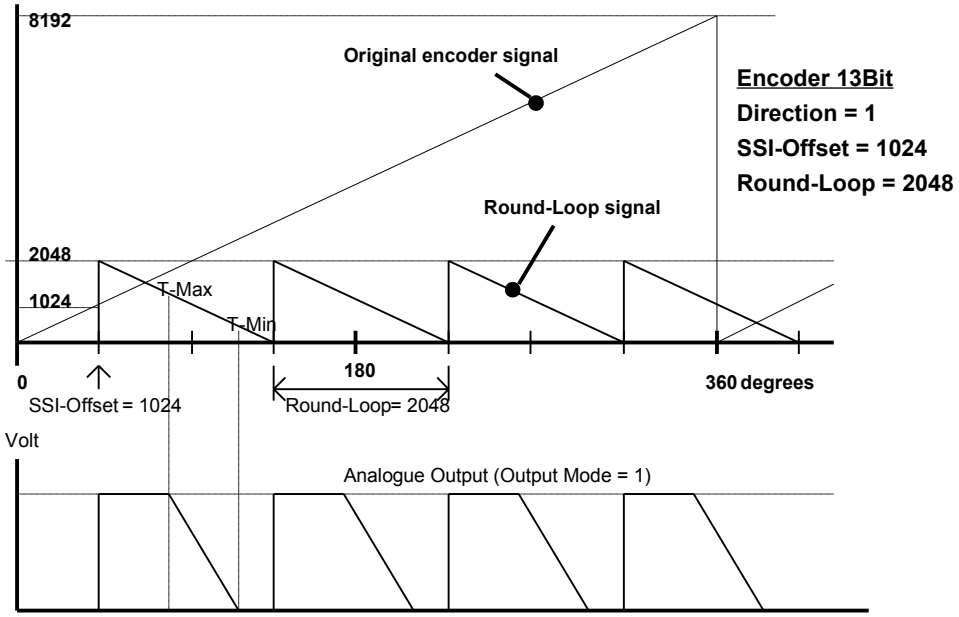

The ROUND LOOP function is also suitable for suppression of the encoder overflow, when the mechanical zero position of your encoder is found between your Teach Minimum and Teach Maximum values and you do not like to change the mechanical configuration. As shown in the subsequent Figure, you need to set the Round Loop register to the full encoder resolution and then shift the zero transition by setting the SSI Offset correspondingly.

NOTE

- Every time you change the value in the **Round Loop** setting, then you are required to enter new values also in **Teach Minimum**, **Teach Maximum** and **SSI Offset** registers.
- Using the ROUND LOOP function it is also possible to change the counting direction of the encoder, by setting the **Direction** bit correspondingly.
- After any action concerning the **Round Loop** and **Direction** settings, new entries of **Teach Minimum**, **Teach Maximum** and **SSI Offset** registers become necessary.

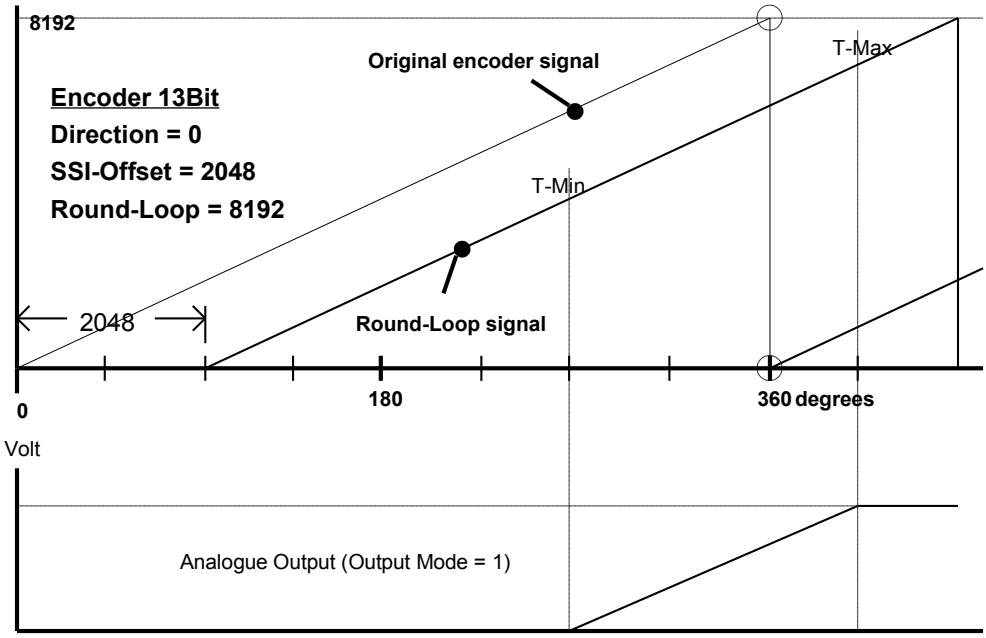

Output Mode

This register allows to select the format of the analogue outputs as shown in the Figure hereafter:

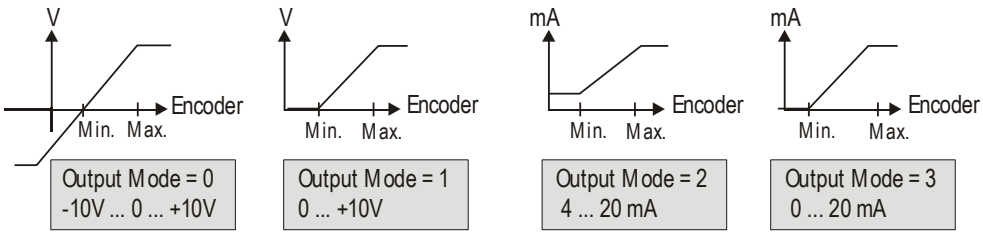

The range of the encoder where the analogue output should move between minimum and maximum output must be set next to the parameters **Teach Minimum** and **Teach Maximum** respectively (see on page 41). If **Output Mode** = 0 (-10V ... +10V) you must set a value that is half the maximum resolution of the encoder next to the **Teach Minimum** parameter (value has to be always positive); you must set the maximum resolution of the encoder next to the **Teach Maximum** parameter. In all other cases (**Output Mode** = 1, 2 or 3) set 0

next to the Teach Minimum parameter; the maximum resolution of the encoder next to the Teach Maximum parameter.

EXAMPLE
Let's assume that the resolution of the connected encoder is 12 x 13 bits (4096 cpr x 8192 revolutions), that is 25 bits = 33554432 information. In this case we must set the following values:

Output Mode = 0 = -10V ... +10V
Teach Minimum = 16777216
Teach Maximum = 33554432

Output Mode = 1 = 0V ... +10V
Teach Minimum = 0
Teach Maximum = 33554432

Output Mode = 2 = 4mA ... 20mA
Teach Minimum = 0
Teach Maximum = 33554432

Output Mode = 3 = 0mA ... 20mA
Teach Minimum = 0
Teach Maximum = 33554432

Linearisation Mode

This register sets the linearisation mode.

0 Linearisation off, registers P1 to P16 do not affect the output characteristics.
1 Linearisation in a range of 0 – 100%.
2 Linearisation over full range –100% to +100%.

See examples in the section "11 - Free programmable linearisation" on page 51.

10.3 SSI specific settings

SSI Low Bit

This register defines the lowest bit (LSB) for evaluation, when the bit blanking function is used. See "Hint for the use of the bit blanking function" below in this page.
It must be set to "01" for evaluation of the full encoder range.

SSI High Bit

This register defines the highest bit (MSB) for evaluation, when the bit blanking function is used. See "Hint for the use of the bit blanking function" below in this page.
It must be set to the total number of encoder bits for evaluation of the full encoder range.

EXAMPLE
In the following example a 13-bit encoder is shown with **SSI High Bit** set to 12 and **SSI Low Bit** set to 03, resulting in evaluation of bits 03 to 12 only and blanking out positions 01, 02 and 13.

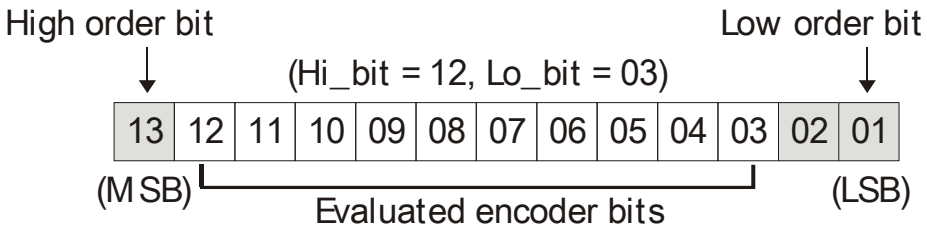

Hint for the use of the bit blanking function
Bit blanking results in a different evaluation of the encoder information, thus you should be fully aware of what happens with the resolution and the number of registered turns when you use this function.

EXAMPLE
In the following example two different results when blanking out one bit in a 13-bit single-turn encoder are explained.

- Without blanking, a 13-bit encoder would provide 0 – 8191 information at each 0 - 360° turn of the encoder shaft.
  This would assume a setting of **SSI High Bit** = 13 and **SSI Low Bit** = 01.

It is easy to understand that there are two different ways to use only 12 of the 13 bits available:

- When we set **SSI High Bit** to 12 while **SSI Low Bit** remains 01, we have blanked the high order bit. The result corresponds to an encoder providing 0 – 4095 information while we turn from 0 - 180°, and again the same 0 – 4095 information while we continue from 180° to 360°. The resolution remains unchanged as far as the number of steps per revolution is concerned.
- We can also keep the **SSI High Bit** value unchanged (13) and set **SSI Low Bit** to 02 instead. This means we blank the low order bit now. As a result, within one turn of 0 - 360°, we receive the encoder information 0 – 4095 one time only, thus the total number of steps per revolution is down by half.

SSI Baud Rate

This register sets the communication speed of the SSI interface with SSI encoders.
Setting range: 100 Hz to 1MHz.
You are free to set any desired frequency between 0.1 kHz and 1000.0 kHz. For technical reasons however, in the upper frequency range with Master operation, the unit will only generate one of the following frequencies accurately:

1000,0 kHz	888,0 kHz	800,0 kHz	727,0 kHz	666,0 kHz
615,0 kHz	571,0 kHz	533,0 kHz	500,0 kHz	470,0 kHz
444,0 kHz	421,0 kHz	400,0 kHz	380,0 kHz	363,0 kHz
347,0 kHz	333,0 kHz	320,0 kHz	307,0 kHz	296,0 kHz
285,0 kHz	275,0 kHz	266,0 kHz	258,0 kHz	250,0 kHz

With Master operation, other settings will result in generation of the next upper or lower value according to above list. With all settings < 250.0 kHz the error between set rate and generated rate becomes negligible.
It is mandatory to set the Baud rate also with Slave operation. In this case, however, the setting is only used to determine the pause time for correct synchronization (pause is detected after 4 clock cycles). The unit automatically synchronizes with every remote clock signal within the specified Baud rate range.

SSI Wait Time

This register sets the waiting time (gap) between two SSI telegrams in a range from 0.001 to 99.999 sec. During normal operation, due to processor cycle times, the real time may vary by 512 µsec. with respect to the preset time. The fastest sequence possible is 1.3 µsec with a setting of 0.000.
In Slave operation mode, the distance of the SSI protocols depends on the remote Master and the **SSI Wait Time** specifies the distance of evaluation data strings. Setting this register to 100 msec results in evaluation of one telegram only every 100 msec, even though the Master may have transmitted many telegrams more.
Especially with applications of closed-loop control loops, it may be advantageous to have fixed updating cycles of the analogue output (DIL switch 7 0-20mA / 4-20mA out = OFF). This is possible in Master mode only, and the **SSI Wait Time** setting (it must be > 0) directly corresponds to the time pattern of updates.

The Figure below explains the timing with use of fixed updating cycles mode when the **SSI Wait Time** item is set to 3 msec.

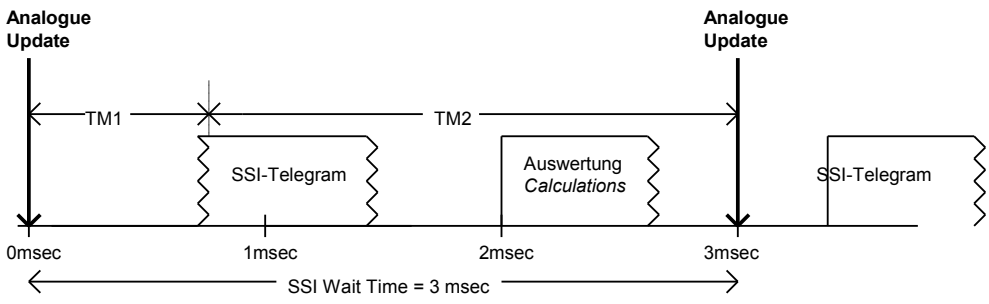

NOTE

- The shortest time allowed for fixed updating cycles is 1.3 msec, due to internal processing times (**SSI Wait Time** set to 0.001).
- The time marks TM1 and TM2 shown in the Figure above can be displayed using the MONITOR function of the PC operator software. It is easy to understand that the sum of both times must be equal to the **SSI Wait Time** setting; otherwise you must increase the Baud rate or choose a longer update cycle. The serial access codes are „ :3 " for TM1 and „ :5 " for TM2.
- In critical cases you can reduce the internal processing times of the unit, by omitting the conversion of serial RS-232 encoder data. For this, just set parameter **/ Operand** to 00000.

SSI Offset

This register defines the electrical zero position of the encoder with respect to the mechanical zero position. When the ROUND LOOP function is not active (**Round Loop** = 0), the **SSI Offset** value is subtracted from the SSI position reading, which can also cause negative results. When the ROUND LOOP function is active, **SSI Offset** displaces the mechanical zero position, but always within positive values only. See also **Round Loop** item and the relevant example.

SSI Set value

Applying a remote SET signal to the SET input (DIL switch terminal 10) results in a temporary replacement of the SSI position value by the **SSI Set value** entered here. This function allows easy testing and simulation of fixed analogue output values while commissioning. See paragraph "7.4 SET input" on page 38.

10.4 SSI error settings

SSI Error Bit

This register defines the position of the error bit, if available for the encoder you use. Errors indicated by the encoder can be read out via serial code „ ;9 " (semicolon nine, error indication = 2000hex). In case of error, the ERROR BIT ACTIVE items in the OUTPUTS box will appear red in your PC screen and the front yellow LED will blink at a 1:4 On/Off ratio.

00 no error bit available
13 bit 13 represents the error bit
25 bit 25 represents the error bit, and so on

SSI Error Bit Polarity

This register defines the polarity of the error bit.

0 Bit is LOW in case of error
1 Bit is HIGH in case of error

10.5 Linearisation settings in %

P01 (x) ... P16 (y)

Linearisation registers and further information are available in section "11 - Free programmable linearisation" on page 51.

10.6 Set-up settings

Analogue Offset

This register can adjust the analogue zero output in a range of approx. +/- 100mV or +/- 200 µA respectively, if necessary.

Analogue Gain

This parameter sets the maximum output swing of the analogue output.
Setting 1000 results in a 10 volts or 20 mA respectively output swing.

Direction

This parameter changes the internal direction of counting (0 or 1), provided the unit operates in the ROUND LOOP mode. See **Round Loop** item on page 42.
Any changes of the **Round Loop** or **Direction** registers require a new TEACH procedure. See section "7 - Commissioning" on page 37.

10.7 RS-232 / RS-485 settings

Unit Number

It is necessary to assign a specific address to each unit, since up to 32 units can be connected to the same bus in RS-485 networks. You can choose any address number between 11 and 99.
Default factory setting = 11
The address must not contain any "0" because such numbers are reserved for collective addressing of several units or groups.

Serial Baud Rate

Setting	Baud
0 (factory default)	9600
1	4800
2	2400
3	1200
4	600
5	19200
6	38400

Serial Format

Setting	Data bits	Parity	Stop bits
0 (factory default)	7	even	1
1	7	even	2
2	7	odd	1
3	7	odd	2
4	7	none	1
5	7	none	2
6	8	even	1
7	8	odd	1
8	8	none	1
9	8	none	2

11 - Free programmable linearisation

This programmable feature allows the user to convert a linear motion to a non-linear analogue output and vice versa. There are 16 programmable interpolation points available, which can be set in any desired distance over the full conversion range. Between two points, the unit uses linear interpolation. Therefore it is advisable to use more points in a section with strong curves and only a few points where the curvature is lower.
To specify your desired linearisation curve, you must set the **Linearisation Mode** register to either 1 or 2 first.
Use registers **P1(x)** to **P16(x)** to specify the coordinates on the x-axis. These are the analogue output values that the unit normally would generate according to the actual encoder position. These settings must be expressed in percentage (%) of the full scale.
Now enter the desired values to registers **P1(y)** to **P16(y)**. These are the values that the analogue output will generate instead of the x- values.
As an example, the value set next to **P2(y)** will be used instead of the encoder value **P2(x)** etc.

NOTE

- X-registers must use continuously increasing settings, i.e. **P1(x)** item must have the lowest setting and **P16(x)** item must have the highest setting.
- All entries use a percentage format which is xx.xxx% of the full scale. Setting 0.000% means zero output while setting 100.000% means full scale output.
- With **Linearisation Mode** set to **1**, it is compulsory to set **P1(x)** register to 0% and **P16(x)** register to 100%. Linearization is defined in the positive range only and the negative range will be a mirror image of the positive range with reference to zero.
- With **Linearisation Mode** set to **2**, it is compulsory to set **P1(x)** register to –100% and **P16(x)** register to +100%. This enables the user to set curves which are not symmetric to the zero position.

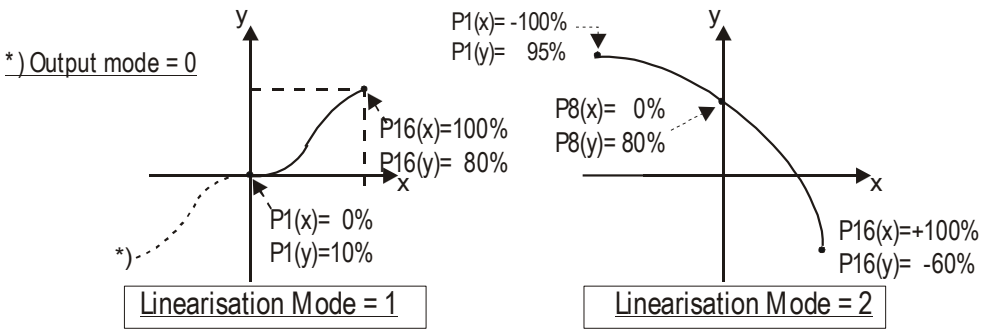

You can display your curve on the PC screen or by means of an external oscilloscope. For this, select TOOLS in the menu bar of the OS3.2 PC operator software, then press TEST command and finally ANALOGUE VOLTAGE FUNCTION

command. The unit will now simulate a repeating motion of the encoder over the full range and generate the analogue signal accordingly.
When you use the OSCILLOSCOPE function of the operator software, you must set the serial code „ :1 " to record the analogue output.

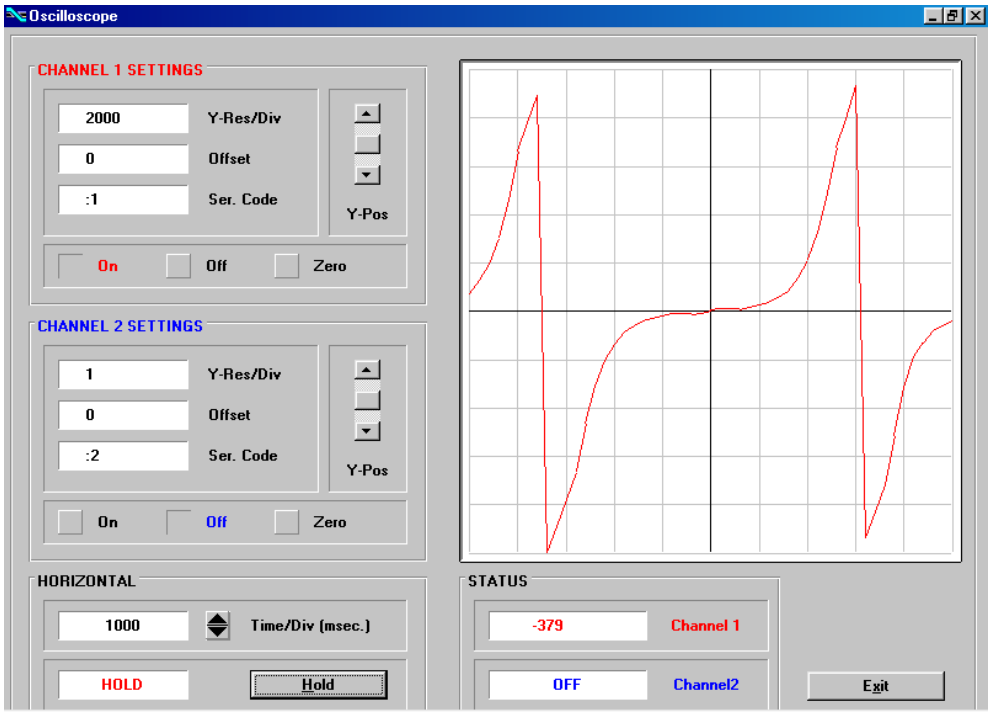

12 - Testing functions

When you select the TEST command in the TOOLS menu, you are able to verify the following data, by clicking on the corresponding field:

- actual encoder position;
- DIL switch settings;
- internal supply voltages;
- analogue output state.

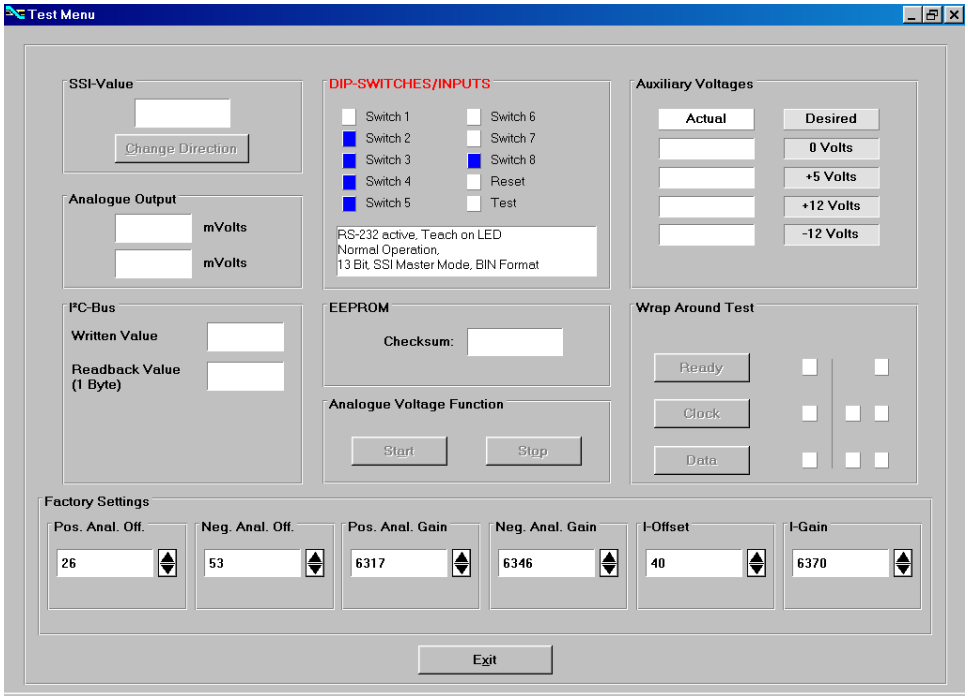

Furthermore, the following registers can be recorded by using the MONITOR function:

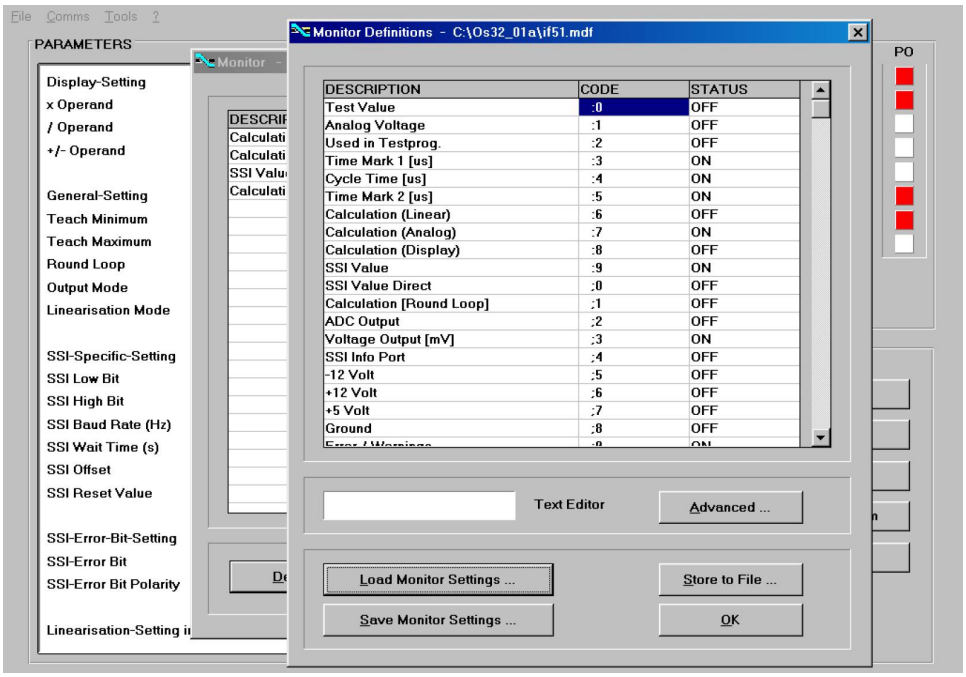

13 - Parameters list

Parameter	Min. value	Max. value	Default	Positions	Char.	Serial Code
X Operand	-10.0000	+10.0000	1.0000	+/- 6	4	00
/ Operand	0	10.0000	1.0000	6	4	01
+/-Operand	-99999999	99999999	0	+/- 8	0	02
Teach Minimum	-99999999	+99999999	0	+/- 8	0	03
Teach Maximum	-99999999	+99999999	10000	+/- 8	0	04
Round Loop	0	99999999	0	8	0	05
Output Mode	0	3	0	1	0	06
Linearisation Mode	0	2	0	1	0	07
SSI Low Bit	0	25	1	2	0	08
SSI High Bit	1	25	25	2	0	09
SSI Baud Rate	100	1000000	100000	7	0	10
SSI Wait Time	0	10.000	0	5	3	11
SSI Offset	0	99999999	0	8	0	12
SSI Set value	0	99999999	0	8	0	13
SSI Error Bit	0	25	0	2	0	14
SSI Error Bit Polarity	0	1	0	1	0	15
P1(x)	-100.000	+100.000	100000	+/- 6	3	A0
P1(y).....	-100.000	+100.000	100000	+/- 6	3	A1
P16(x)	-100.000	+100.000	100000	+/- 6	3	D0
P16(y)	-100.000	+100.000	100000	+/- 6	3	D1
Direction	0	1	0	1	0	46
Analogue Offset	-99	+99	0	+/-2	0	47
Analogue Gain	0	10000	1000	5	0	48
Unit Number	0	99	11	2	0	90
Serial Baud Rate	0	6	0	1	0	91
Serial Format	0	9	0	1	0	92

This page intentionally left blank

Document release	Description
1.0	1st issue
1.1	Teach Minimum, Teach Maximum, Output Mode parameters updated with examples of setting

Lika Electronic
Via S. Lorenzo, 25 - 36010 Carrè (VI) - Italy

Tel. +39 0445 806600
Fax +39 0445 806699

Italy: eMail info@lika.it - www.lika.it
World: eMail info@lika.biz - www.lika.biz